Indian J. Edu. Inf. Manage., Vol. 1, No. 9 (Sep 2012) ISSN 2277 - 5374

Improvement of power Systems Operation using smart grid technology

Saeed Mohammadi

Kermanshah University of Technology

Corresponding author: Saeed Mohammadi. Kermanshah University of Technology, Email: sd.mohammadi1@gmail.com

Abstract

Smart-Grid" is a new term dealing with intelligent, auto-balancing, self monitorin power grids with minimal human intervention. Implementation of such smart grids will lead to reliable operation and effective performance of distributed generations (DGs) specially based on renewable energy resources, as well as enabling better use of traditional assets. Moreover, this technology causes better operation of power grids, further reliability and power quality issues through using advanced controllers, power electronic equipments and economical and managerial decisions making. Nowadays, several categories are proposed toward Smart-Grid concept which includes: developing information technology (IT) and Integrated communications across the grid, designing advanced control methods, advanced sensing, metering and measurement devices and technologies, utilization of dispersed generations and finally, designing main and local supervisory control units along with suitable human interfaces. In this paper a clear description of smart grid is presented. Then by proposing a typical power network containing DGs, it's trying to make an intelligent grid using modern FACTS controllers and developing effective control methods.

***Keywords*:** Distributed generation, FACTS devices, renewable energy, Smart grid.

1. Introduction

A new trend in power systems is developing toward a distributed generation (DG), which means that energy conversion systems (ECSs) are situated close to energy consumers and large units are substituted by smaller ones. For the consumer the potential lower cost, higher service reliability, higher power quality, increased energy efficiency, and energy independence are all reasons for interest in distributed energy resources (DERs). The use of renewable distributed energy generation and "green power" such as wind turbines, photovoltaic solar systems, solar-thermo power, biomass power plants, fuel cells, gas micro-turbines, hydropower turbines, combined heat and power (CHP) microturbines and hybrid power systems can also provide a significant environmental benefit. This is also driven by an increasingly strained transmission and distribution infrastructure as new lines lag behind demand and to reduce overall system losses in transmission and distribution. Other motives are the increased need for reliability and security in electricity supply, high power quality needed by an increasing number of activities requiring UPS like systems and to prevent or delay the expansion of central generation stations by supplying the growing loads locally (Purchala et al., 2006). This paper will start by taking a look at the concept of distributed generation and future power systems called "Smart-Grids". Afterwards, the intelligent system architecture and control methodology are introduced. Finally, a case study is carried on to validate the proposed strategy.

1.1 Distributed generation and future Smart Power systems

Energy plays a vital role in the development of any nation. The current electricity infrastructure in most countries consists of bulk centrally located power plants connected to highly meshed transmission networks. However, a new trend is developing toward distributed energy generation, which means that ECSs will be situated close to energy consumers and the few large units will be substituted by many smaller ones. Although, there is no consensus on how the DG should be exactly defined (Pepermans et al., 2005), but in general, DG describes electric power generation that is geographically distributed or spread out across the grid, generally smaller in scale than traditional power plants and located closer to the load, often on customers' property. Distributed generation is characterized by some or all of the following features:

- Small to medium size, geographically distributed power plants
- Intermittent input resource, e.g., wind, solar
- Stand-alone or interface at the distribution or subtransmission level
- Utilize site-specific energy sources, e.g., some wind turbines require a sustained wind speed of 20 km/hour. To meet this requirement they are located on mountain passes or the coast
- Located near the loads
- Integration of energy storage and control with power generation

However, in the last decade, technological innovation, economical reasons and the environmental policy renew the interest in DG. The major reasons for that are:

- To reduce dependency on conventional power resources
- To reduce emissions and environmental impact
- Market liberalization
- To Improve power quality and reliability
- Progress in DG technologies especially RESs
- To reduce transmission costs and losses

Indian J. Edu. Inf. Manage., Vol. 1, No. 9 (Sep 2012) ISSN 2277 - 5374

- To increase system security by distributing the energy plants instead of concentrating them in few locations making them easy targets for attacking.

Besides, for the consumer the potential lower cost, higher service reliability, high power quality, increased energy efficiency, and energy independence are all reasons for interest in distributed energy resources (DERs) and focusing on what is called "Smart Grids", as the future of power systems. Although the "Smart Grid" term was used for a while, there is no agreement on its definition, in other words the concept of intelligence in Smart Grid design and how it will be measured is unclear and, in this paper, a working definition is presented that will help to put in context the framework for discussing and designing the Smart Grid. One of the best and general definitions of a smart grid is presented in (Energy, 2007). Smart grid is an intelligent, auto-balancing, self monitoring power grid that accepts any source of fuel (coal, sun, wind) and transforms it into a consumer's end use (heat, light, warm water) with minimal human intervention. It is a system that will allow society to optimize the use of reneewable energy sources (RESs) and minimize collective environmental footprint. It is a grid that has the ability to sense when a part of its system is overloaded and reroute power to reduce that overload and prevent a potential outage situation; a grid that enables real-time communication between the consumer and utility allowing optimizing a consumer's energy usage based on environmental and/or price preferences (Momoh, 2009; Molderink et al., 2009; Venayagamoorthy, 2009).

There are some defining features that exist in most smart grids:

- A smart grid will provide an interface between consumer appliances and the traditional assets in a power system (generation, transmission and distribution)

This two-way communication will allow the consumer to better control their energy usage and provides more choices to the customer. Furthermore, the two-way communication will also allow better demand-side management (DSM) such that in certain situations the system operator can be given control of the loads in the system enabling more agile responses to system behavior

- A smart grid will be at least semi-autonomous

The use of intelligent systems will enable the power system to respond to stimulus, observed through sensor networks, with limited input from a human. This will enable much faster operations when handling interruptions in the power system and may even be able to identify areas of concern and reconfigure the power system to mitigate potential contingencies.

- A smart grid will optimize the assets of the power system

The use of responsive operating protocols will optimize power flows along existing transmission thereby improving the reliability of the system and deferring capital expenditure on transmission upgrades. Due to the communication of peak load periods and the likely subsequent consumer response to increased price signals the peak loads will be reduced and the need for expensive flexible generation technologies will be reduced.

- A smart grid will support better integration of distributed generation into the conventional centralized power system

Improved communications and more advanced metering technologies will enable more intelligent incorporation of decentralized power production through the use of better sensors and two-way metering. This will allow customers (whether residential, commercial or industrial) to re-evaluate the proposition of connecting local generation equipment.

The customer could in fact be an energy supplier as well as an energy consumer that is a producer-consumer or "prosumer". Overall, the Smart Grid design goals are to provide grid observability, create controllability of assets, enhance power system performance and security and reduce costs of operations, maintenance and system planning. Advance interactions of agents such as telecommunication, sensing, control, and optimization agents shown in (Fig. 1).

I. Key Technologies Involved In Smart Grid

The key technologies involved in Smart Grids include the following:

1. Integrated communications across the grid.
2. Advanced control methods.
3. Sensing, metering, and measurement.
4. Advanced grid components.
5. Decision support and human interfaces

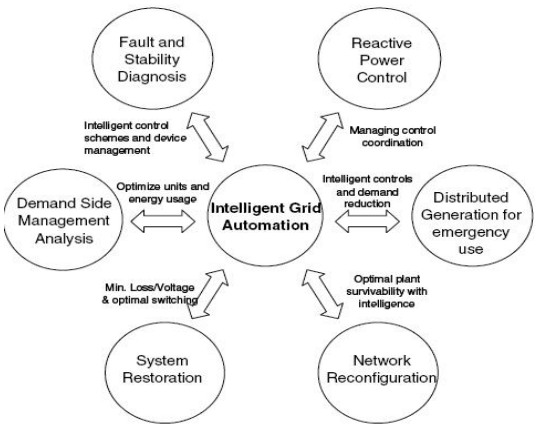

Fig.1: Smart grid intelligent automation

Advanced control methods

Computer-based algorithms that collect data from and monitor all essential grid components, analyze the data to diagnose and provide solutions from both deterministic and probabilistic perspectives, determine and take appropriate actions autonomously, provide information and solutions to human operators and integrate with enterprise-wide processes and technologies. These advanced control methodologies would support such applications as distributed energy resources and demand response dispatch, distribution automation and substation automation (IEC 61850), adaptive relaying, energy management, market pricing, grid modeling, operator displays and advanced visualization systems, to name a few. In addition, they would be integrated into asset management processes and technologies to further optimize grid operations and planning (Chuang and McGranaghan, 2009).

A. Sensing, metering, and measurement

New digital technologies using two-way communications, a variety of inputs (pricing signals, time-of-day tariff, transmission curtailments for congestion relief), a variety of outputs (real time consumption data, power quality, electric parameters), the

Indian J. Edu. Inf. Manage., Vol. 1, No. 9 (Sep 2012) ISSN 2277 - 5374

ability to connect and disconnect, and interfaces with generators, grid operators, and customer portals to enhance power measurement, provide outage detection and response, evaluate the health of equipment and the integrity of the grid, eliminate meter estimations, provide energy theft protection, enable consumer choice, and enable demand-side management for congestion relief by the transmission company. In addition, new smart sensors would be applied to various grid monitoring functions, such as intelligent street lighting.

B. Advanced grid components

These are the next generation of power system devices taking advantage of new materials technologies, nanotechnologies, advanced digital designs, etc., to produce higher power densities, better reliability, and improved real time diagnostics to greatly improve grid performance. Such technologies include superconducting transmission cable, fault current limiters, composite conductors, flexible AC transmission systems - FACTS (SSSC, TCSC, TSSC, TCSR, TSSR, STATCOM, SVC, TCVL, TVR, UPFC, TCPST), custom power devices (D-STATCOM, DVR, SSTS), advanced energy storage (SMES, BESS), HVDC devices, distributed generation (wind, solar, micro turbines), advanced transformers and circuit breakers, and smart loads.

C. Decision support and human Interfaces

With the time horizon for operator decisions having moved to seconds, the Smart Grid requires the wide, seamless, real-time use of applications and tools, fully integrated, that transform the grid operator and manager into knowledge workers. This includes the role of artificial intelligence to support the human interface, operator decision support (alerting tools, what-if tools, course-of-action tools, etc.), semi-autonomous agent software, visualization tools and systems, performance dashboards, advanced control room design, and real-time dynamic simulator training.

II. Renewable energy Inasmart grid

As said beforehand, the ability to better integrate renewable energy is one of the driving factors in some smart grid installations. With low levels of renewable energy penetration, the overall effect on grid operations is limited, yet as the penetration levels increase so too do the effects. Nevertheless, exploitation of renewable energy sources (RESs), even when there is a good potential resource, may be problematic due to their variable and intermittent nature. Earlier studies have indicated that energy storage can compensate for the stochastic nature and sudden deficiencies of RESs for short periods without suffering loss of load events, and without the need to start more generating plants (Ruddell et al., McDowall, 2007 Hammons, 2006). Xcel Energy's Smart-Grid-City white paper specifically communicates that a key aspect to its renewable energy integration plan involves a smart grid: "The ability to communicate (via a smart grid) and new improvements in storage (cheaper, longer lasting, higher capacity batteries) allows for a creation of a new market instrument. A smart grid with advanced energy storage reduces the variability associated with renewable energy, enabling more renewable energy on the grid, thus reducing emissions. In addition, peak load problems could be reduced, electrical stability could be improved, and power quality disturbances could be eliminated by using storage options. Fig. 2 shows how the new electricity value chain is changing supported by the integration of energy storage systems.

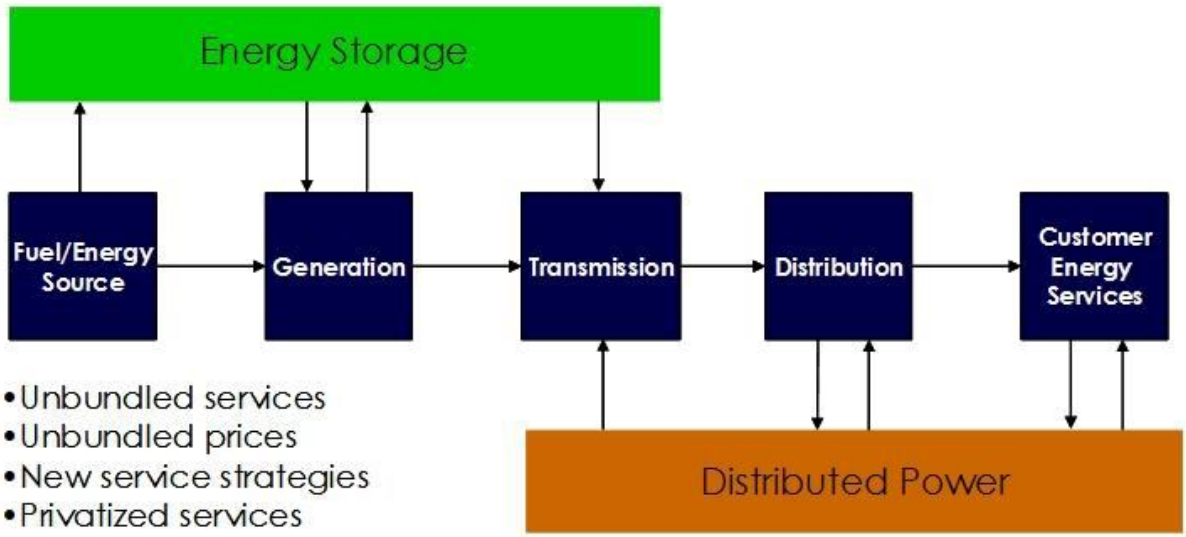

Fig. 2: New electricity value chain with energy storage as the sixth dimension.
[Reproduced based on material from the Energy Storage Council (ESC)]

Furthermore, energy storage systems in combination with power electronics are expected to be key elements for the growth and integration of distributed generation (DG) and renewable energy sources (RES) into the eclectic system to build future smart grids thus, the main focus should be on small to medium sized storages which are installed closely to distributed energy resources.

A. Forecasting renewable energy in a smart grid

For the actual operation of smart grids forecasts of future requirements are essential to be able to prepare the flexible systems to behave in the appropriate manner. Non-scheduled renewable energy resources add another variable to an already complicated balancing act. The fact that these sources of generation cannot be dispatched in the traditional sense can cause problems for conventional system operation. A smart grid takes advantage of potential improvements that can be made to

Indian J. Edu. Inf. Manage., Vol. 1, No. 9 (Sep 2012) ISSN 2277 - 5374

conventional operation through the use of communications and information. While renewable energy cannot necessarily be operated in a conventional manner, its behavior can be predicted and the forecast information is exactly the kind of information that a smart grid must use to improve system efficiency. In fact, as renewable energy penetration levels continue to increase, non-scheduled renewable energy may become the single largest source of variability on the power system. This

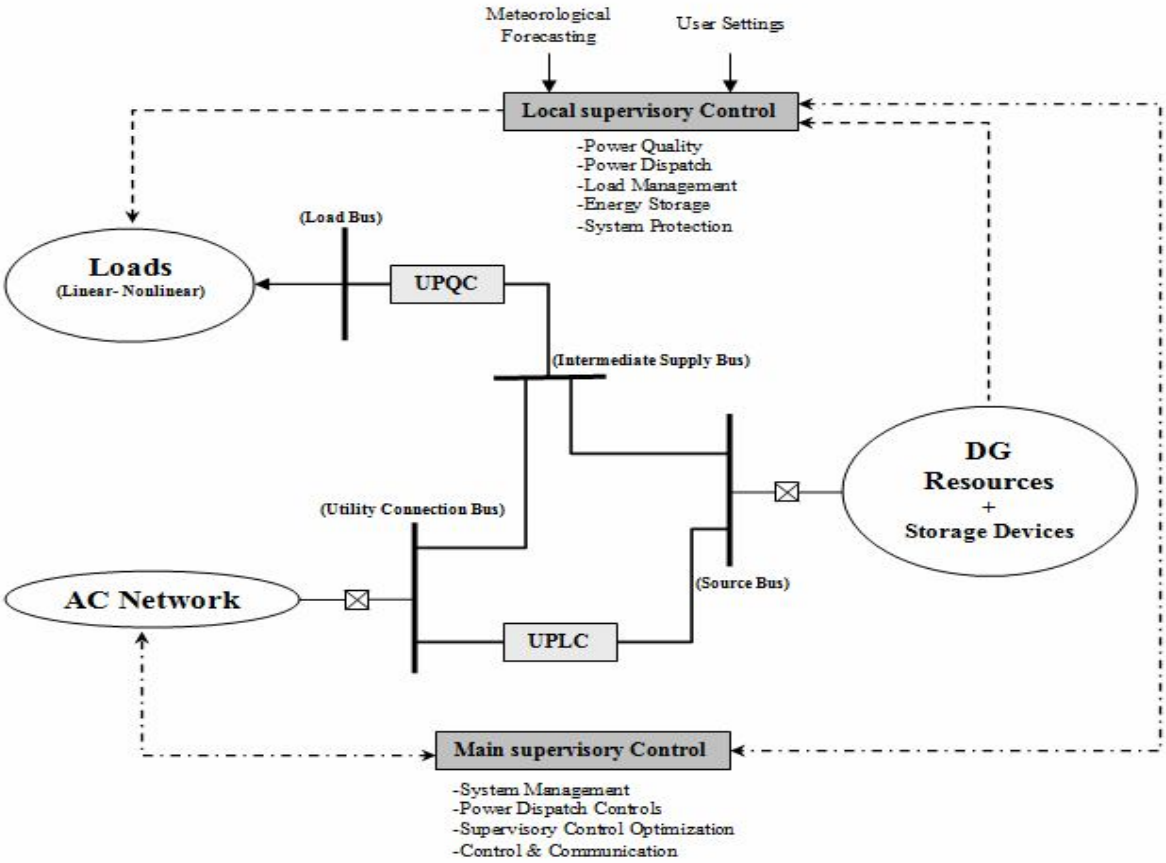

Fig. 3: Desired system structure

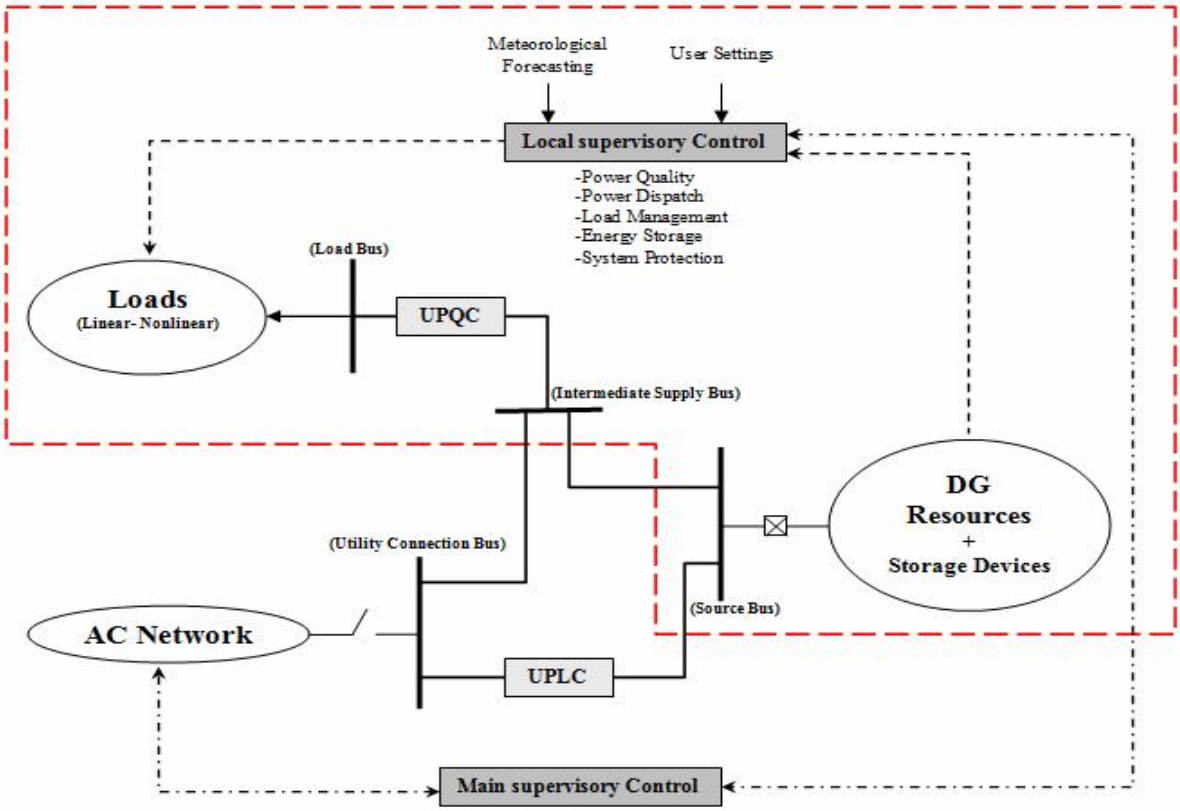

Fig. 4: Basic configuration of a smart-grid with UPLC, UPQC and supervisory control units (red selected area)

Indian J. Edu. Inf. Manage., Vol. 1, No. 9 (Sep 2012) ISSN 2277 - 5374

makes the employment of accurate renewable energy forecasting a key component of a smart grid. In a smart grid, decisions are dynamically made based on information about electricity supply and demand. Basically, in the world of renewable energy integration, forecasting feeds the smart grid. Meteorological processes drive renewable energy generation and thus it is inherently variable. This variability occurs across all of the time frames of utility operation from real-time minute-to-minute fluctuations through to yearly variation affecting long-term planning. However, it is the hour-ahead forecasts that help with the load following of the power system that gain the most in a smart grid. Typically the hour-ahead forecasts employ statistical methods primarily based on the most recent observations. The first phase in developing this type of forecast consists of identifying, compiling and integrating data from a wide variety of sources: location of turbines and anemometers, available observation records, etc. The second phase consists of developing and training various self learning forecasting methods using the entire available data. The final product provides a timely, relevant and accurate forecast. Taking advantage of a vast communication network the forecast of renewable energy will be able to utilize this information from an even wider set of sources.

III. Typical System implementation

The following case study shown in Fig. 3 is carried using MATLAB/SIMULINK. In this model, which shows a typical power network, there are four buses as described below:

- Source bus (or Bus 1): a variety of renewable sources are connected to this bus, such as wind turbine, fuel cell and photovoltaic along with energy storage systems (battery, SMES).
- Utility connection bus (or Bus 2): the utility grid is connected in this bus through a bi-directional converter and associated loads.
- Load bus (or Bus 3): typical consumer loads are connected in this bus.
- Intermediate supply bus: the bus where the supplies come from Bus 1 and Bus 2. It then sends the power to Bus 3 (load bus)

Bus 1 and Bus 2 are connected together through a Universal Active Power Line Conditioner (UPLC). The main function of the UPLC is to control the power flow between the source bus (Bus 1) and the utility connection bus (Bus 2). The UPLC also mitigates current harmonics present in the utility connection bus (Aredes, 1998; Chakraborty and Simoes, 2005). The UPQC integrated in the system imposes that the voltage at the load bus is harmonic-free. It also acts on the total load current, to compensate for current harmonics and reactive power, in a way that the total current coming out of the intermediate supply bus is also harmonicfree and in phase with the fundamental source voltage, resulting in unity power factor (Fujita and Akagi, 1998). The supervisory control is responsible for units dispatching, load management, and power optimization. However, the current and voltage control are done locally at the inverters at both ends. The proposed control can be implemented in isolated grid as well as in interconnected power systems. In this case study the red selected area (as shown in Fig. 4) represents the designed smart grid that should operate intelligently in both modes and serve the loads. In the first step toward making an intelligent grid, the instant at which the intentional islanding occurs must be detected because some loads make islanding detection extremely difficult. Studies have shown that the worst-case load that could be expected to cause the most difficulty islanding detection is a parallel RLC load (Hernandez-Gonzalez and Iravani, 2006; Karimi et al., 2008). The detection is achieved using a SRF phase-locked loop (SRFPLL) (Thacker, et al., 2007). The schematic of the SRF–PLL is illustrated in Fig.5.

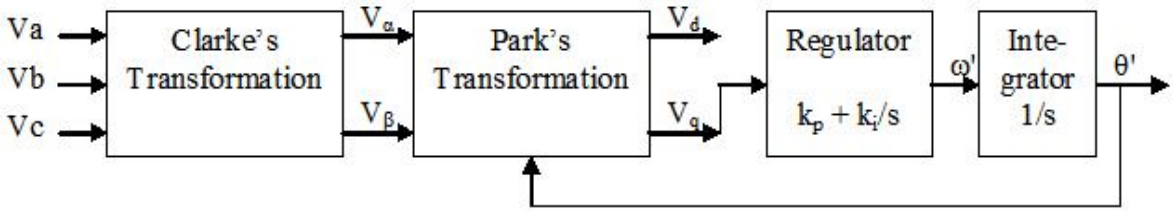

Fig. 5: SRF-PLL structure

The two output parameters, frequency and voltage magnitude, are used in the islanding detection algorithm to detect the grid condition as shown in Fig. 6.

In the next step designing a supervisory control unit is necessary. The proposed Distributed Intelligent Energy Management System (DIEMS), which shown as supervisory control blocks, allows instantaneous optimization of alternative and renewable power sources. The function of the system is to generate set points for all the sources and storages in such a way that economically optimized power dispatch will be maintained to fulfill certain load demand. Generation forecast as well as some fast online algorithms are used to define the energy availability and, finally, to define the optimized power dispatch signals to the loads as well as to the grid using the UPLC. This energy management system consists of prediction module, optimization module and online control module, as shown in Fig. 7.

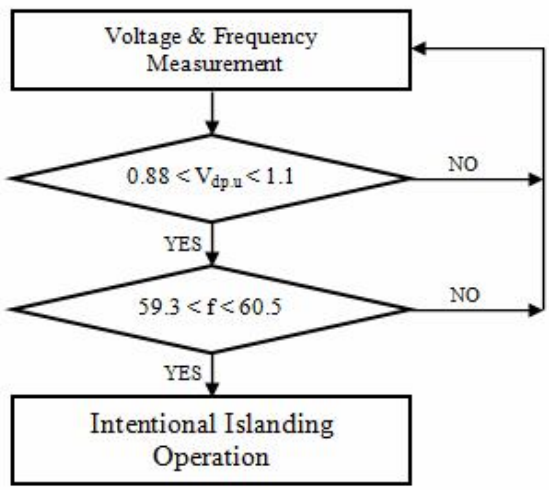

Fig. 6: Intentional islanding detection

Indian J. Edu. Inf. Manage., Vol. 1, No. 9 (Sep 2012) ISSN 2277 - 5374

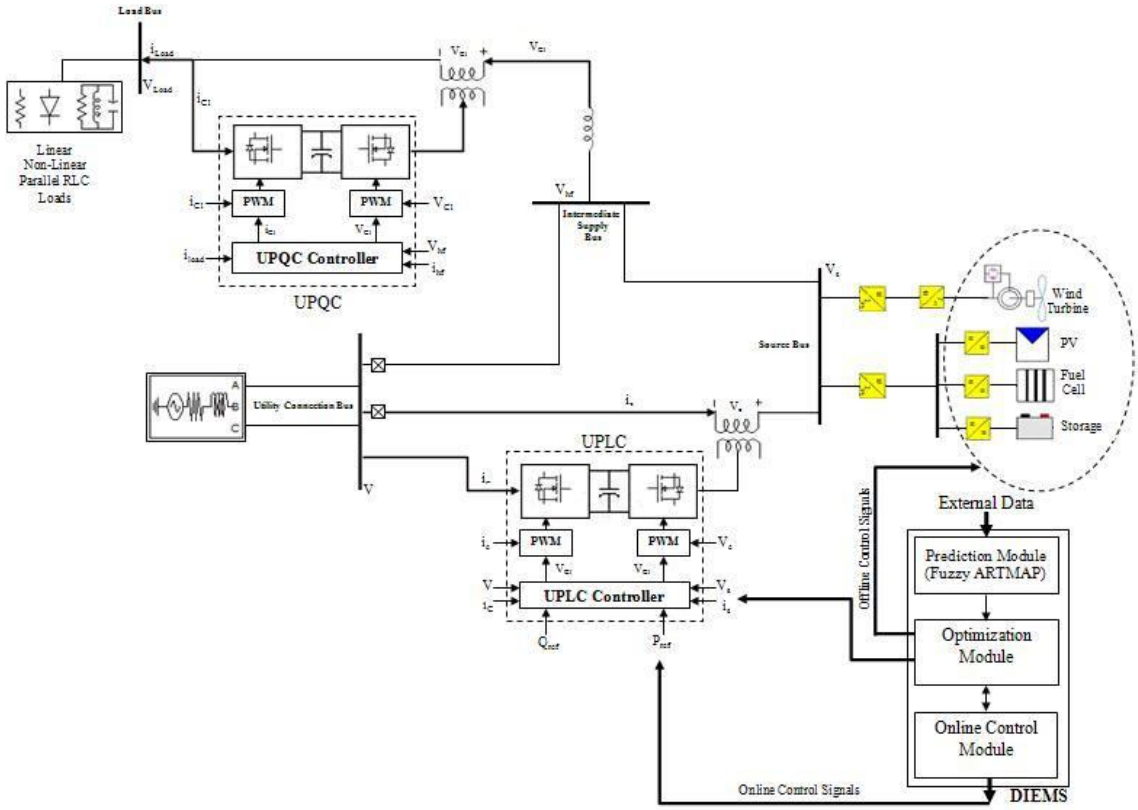

Fig. 7: Block diagram model of the smart grid consists of UPLC, UPQC and DIEMS

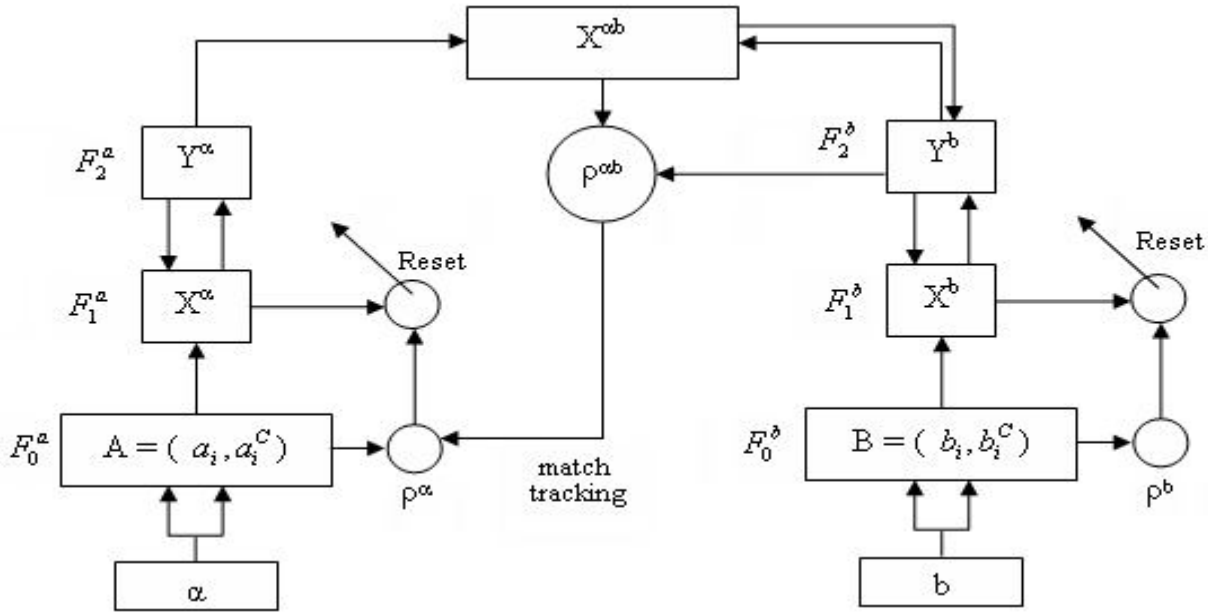

Fig. 8: Fuzzy ARTMAP structure

Whereas the optimization module works offline, the online control module makes sure the power balance is maintained in real-time. The predictions of generation is a complicated task for the smart grid system because the sources connected are mainly the renewable energy sources where the capacity of generation varies largely with the external conditions like sunshine, temperature etc. But on the other hand, to design an efficient controller needs prediction of the generation with considerable accuracy. Forecast of generation is not a very old topic and its relevance increases rapidly with more penetration of renewable energy sources in the power grid.

For example a Fuzzy ARTMAP based day-type forecasting may be used with consideration of photovoltaic and wind energy sources, although it should be noted this can be easily extended for use with other renewable based energy sources. ARTMAP is a class of neural network architectures that perform incremental supervised learning of recognition categories and multi-dimensional maps in response to input vectors presented in arbitrary order (Carpenter et al., 1991). The fuzzy ARTMAP is a more general system that learns to classify inputs by a fuzzy set of features, or a pattern of fuzzy membership values between 0 and 1 indicating the extent to which each feature is present. This generalization is accomplished by replacing ART1

Indian J. Edu. Inf. Manage., Vol. 1, No. 9 (Sep 2012) ISSN 2277 - 5374

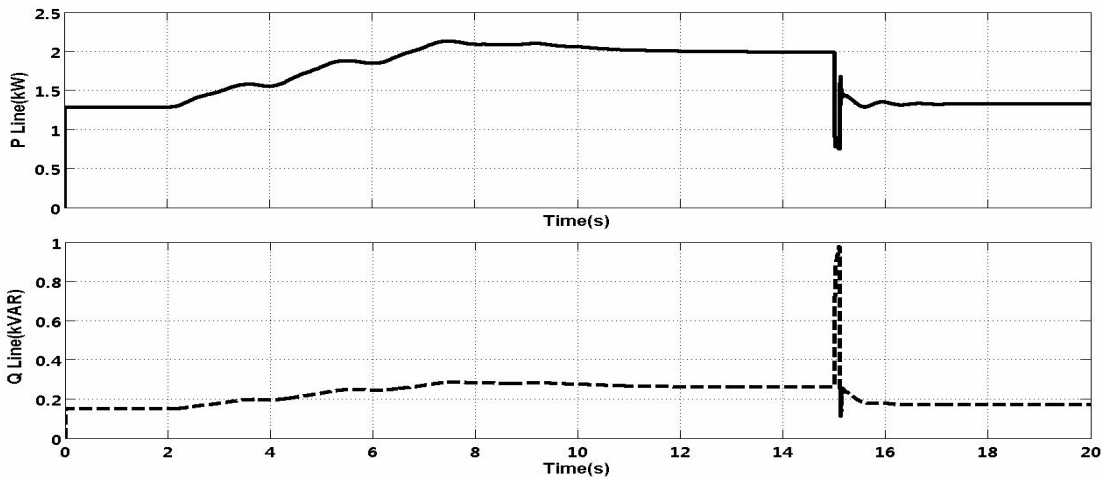

Fig. 9: Active and reactive power flow in the uncontrolled distribution line (a) and in the controlled one (using UPLC) (b)

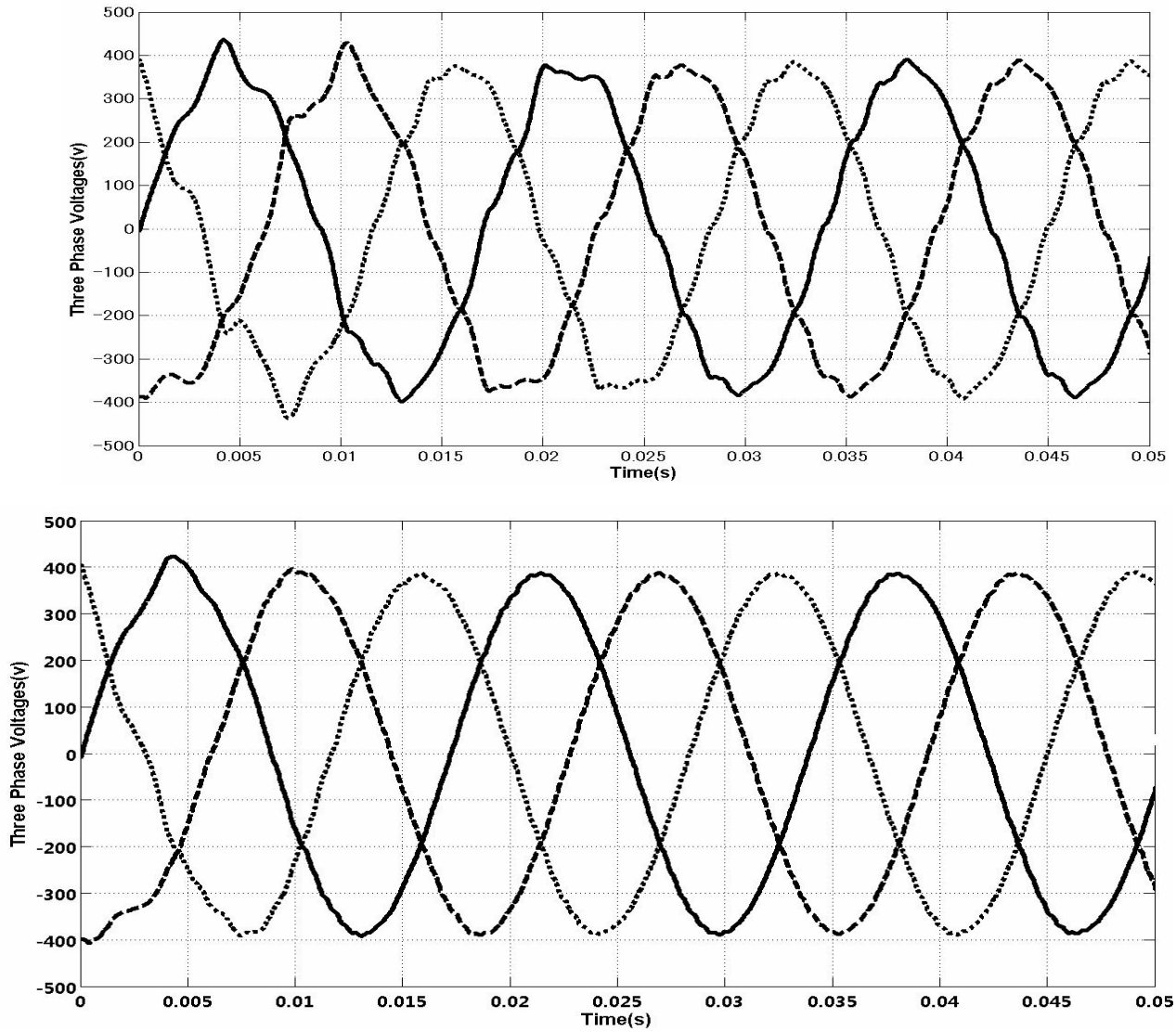

Fig. 10: Three phase voltages before (a) and after compensation (b)

modules of the binary ARTMAP system with fuzzy ART modules. Each Fuzzy ARTMAP system includes a pair of Fuzzy ART modules (ARTa and ARTb), as in Fig. 8, that create stable recognition categories in response to arbitrary sequences of input patterns. During supervised learning, ARTa receives a stream {a (ρ)} of input patterns, and ARTb receives a stream {b (ρ)} of input patterns, where b (ρ) is the correct prediction given a (ρ). These modules are linked by an associative learning network and an internal controller that ensures autonomous system operation in real time. Because of the combination of match tracking and fast learning, a single Fuzzy ARTMAP system can learn a different prediction for a rare event than for a cloud of similar frequent events in which it is embedded (Carpenter and Grossberg, 1991). For hourly day-type forecasting, the weather inputs used in the Fuzzy ARTMAP are time, temperature, pressure, relative humidity (R.H.), solar radiation (insulation), direction and velocity of the wind. Knowledge of available future generation from renewable sources lets the DIEMS to store energy in advance, giving the system more flexibility to take advantage of real-time grid pricing.

Indian J. Edu. Inf. Manage., Vol. 1, No. 9 (Sep 2012) ISSN 2277 - 5374

IV. Simulation Results

First the operation of the smart grid is tested to show that is capable of controlling the power flow between the sources and the grid. Using the software MATLAB/SIMULINK, several simulations were done to evaluate the proposed smart grid. The utility grid and inverter are represented by parallel association of a perfect voltage source of amplitude 330V, 60Hz. and loads constituting a diode bridge, 10mH inductance, 100Ω resistance and 100μF capacitance. In the load bus, parallel associations of highly inductive non-linear loads are connected. At t=15 s, a phase to phase fault is also applied at wind turbine terminals, causing the turbine to trip at t=15.11 s. It is evident from Fig. 9, that the active and reactive power flow between the source bus and the utility connection bus are controlled by UPLC.

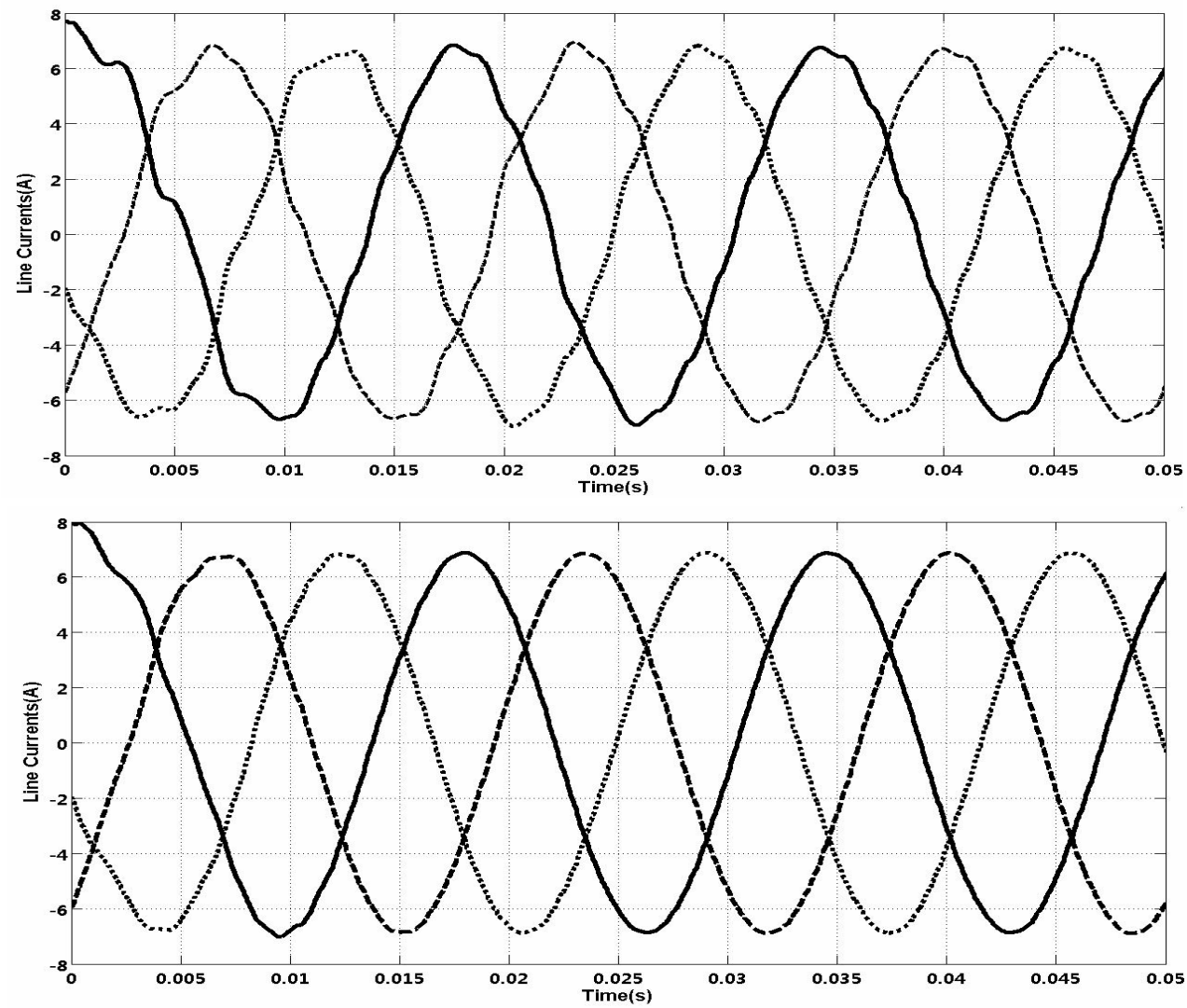

Fig. 11: Load currents before (a) and after compensation (b)

From Fig. 10, it is evident that the voltage at intermediate supply bus has harmonics in it and the series converter in the UPQC mitigates the source voltage harmonics, so the load voltage is harmonic free. Similarly, the load current harmonics, as in Fig. 11, is compensated by the shunt converter in UPQC making the current from intermediate supply bus perfectly sinusoidal. After satisfactory operation of the power electronics and FACTS controllers, the next goal is to show that the higher level DIEMS controller can be designed based on the successful hourly day-type forecasting. The hourly weather data for training and testing of the neural network is collected from the National Climatic Data Center (NCDC) and National Renewable Energy Laboratory (NREL) websites (http://www.nrel.gov/midc/). The Fuzzy ARTMAP is trained with a single month data and tested with a different month data. The inputs used are the time, temperature, relative humidity, pressure, insulation wind speed and itsdirection. As the length of the day varies with change in month, to compensate its effect, previous outputs are used as the additional inputs in some of the simulations (Slootweg, 2009). The results of the simulations are given in Table 1. All data are scaled between 0 and 1 before using. So it is evident that using previous hour's output data as the inputs helps the neural network to predict better.

Indian J. Edu. Inf. Manage., Vol. 1, No. 9 (Sep 2012) ISSN 2277 - 5374

Table 1: Results for testing Fuzzy artmap Performance	
Input Training Data	Testing Performance (%success)
Weather Inputs Only	66.8%
Weather inputs and one previous hour output	68.4%
Weather inputs and two previous hours outputs	71.9%

5. Conclusion

A smart grid has the potential to revolutionize the power systems operations, a revolution that will need to occur if very large penetrations of renewable energy are to be incorporated onto the grid. However, in order to efficiently operate and make good decisions, a smart grid must have information feeding supervisory control unit and Distributed Intelligent Energy Management System (DIEMS), although the whole DIEMS structure is out of scope for this paper and will be presented in future papers. This information can be used to develop better procedures and capabilities for the smart grid and allow more prudent investments. Moreover the optimal integration of decentralized energy storages will be an extremely important task in the near future for the utilities. The main target is to develop general and exceptionally flexible integration strategy for the integration of distributed energy storage systems based on standard flexible soft- and hardware platforms. The main focus should be on small to medium sized storages which are installed closely to distributed energy resources. Therefore, there is an obvious need to investigate the feasibility /efficiency of integrating different distributed energy storage systems in combination with distributed energy resources and their influence on the penetration of renewable energy as well as on the electric grid and conventional power stations.

References

1. Aredes A, Heumann K, and Watanabe EH (1998) An universal active power line conditioner," IEEE Trans. On Power Delivery, vol. 12, no. 2, pp. 545 – 551, April 1998.
2. Carpenter GA and Grossberg S (1994). Self-organizing neural networks for supervised and unsupervised learning and prediction", from the book From Statistics to Neural Networks, edited by V. Cherkassky, J. H. Friedman, H. Wechsler, NATO ASI Series, 1994.
3. Carpenter GA, Grossberg S and Reynolds JH (1991) ARTMAP: Supervised real-time learning and classification of nonstationary data by a self-organizing neural network, Neural Networks, vol. 4, no. 5, pp. 565- 588.
4. Chakraborty S, and Simoes MG (2005) Advanced active filtering in a single phase high frequency AC microgrid," presented in IEEE-PESC'05, Recife, Brazil.
5. Chuang A, McGranaghan M (2008) Functions of a local controller to coordinate distributed resources in a smart grid, Power and Energy Society General Meeting - Conversion and Delivery of Electrical Energy in the 21st Century, pp.1 - 6 20-24.
6. Energy X (2007) Xcel Energy Smart Grid: A White Paper, Denver Business Journal.
7. Fujita H and Akagi H (1998) The unified power quality conditioner: the integration of series and shunt- active filters," IEEE Trans. on Power Electronics, vol. 13, No.2, pp. 315 – 322.
8. Hammons TJ (2006) Integrating Renewable Energy Sources into European Grids, Universities Power Engineering Conference, 2006. UPEC '06. Proceedings of the 41st International Volume 1, 6-8.
9. Hernandez-Gonzalez G, Iravani R (2006) Current injection for active islanding detection of electronically-interfaced distributed resources," Power Delivery, IEEE Transactions on, Volume 21, Issue 3, pp. 1698 – 1705.
10. Karimi H, Yazdani A, Iravani R (2008) Negative-Sequence Current Injection for Fast Islanding Detection of a Distributed Resource Unit," Power Electronics, IEEE Transactions on, Volume 23, Issue 1, pp. 298 – 307.
11. McDowall JA (2007) Status and Outlook of the Energy Storage Market," presented at PES 2007, Tampa.
12. Measurement and Instrumentation Data Center (MIDC), National Renewable Energy Laboratory (NREL), http://www.nrel.gov/midc/.
13. Molderink A, Bakker V, Bosman MGC, Hurink JL. Smit GJM (2009) Domestic energy management methodology for optimizing efficiency in Smart Grids", PowerTech, 2009 IEEE Bucharest, pp: 1 – 7.
14. Momoh JA (2009) Smart grid design for efficient and flexible power networks operation and control", Power Systems Conference and Exposition, 2009. PES '09. IEEE/PES, pp: 1 – 8, 15-18.
15. Pepermans G, Driesen J, Haeseldonckx D, Belmans R, and D'haeseleer W (2005) Distributed generation: definition, benefits and issues. Energy Policy, vol. 33, pp. 787-798, 2005
16. Purchala K, Belmans R, Exarchakos L, and Hawkes AD (2006) Distributed generation and the grid integration issues.
17. Ruddell A, Schonnenbeck G, Jones R. Flywheel Energy Storage Systems," Rutherford Appleton Lab, UK.

Indian J. Edu. Inf. Manage., Vol. 1, No. 9 (Sep 2012) ISSN 2277 - 5374

18. Slootweg H (2009) Smart Grids - the future or fantasy?, Smart Metering - Making It Happen, 2009 IET 19, 19 Feb. 2009 , pp.1 – 19.

19. Thacker T, Wang F, Burgos R, Boroyevich D (2007) Islanding Detection Using a Coordinate Transformation Based Phase-Locked Loop," Power Electronics Specialists Conference, 2007, IEEE, 17-21, pp. 1151 – 1156.

20. Venayagamoorthy, Ganesh K (2009) Potentials and promises of computational intelligence for smart grids", Power & Energy Society General Meeting, 2009. PES '09. IEEE.